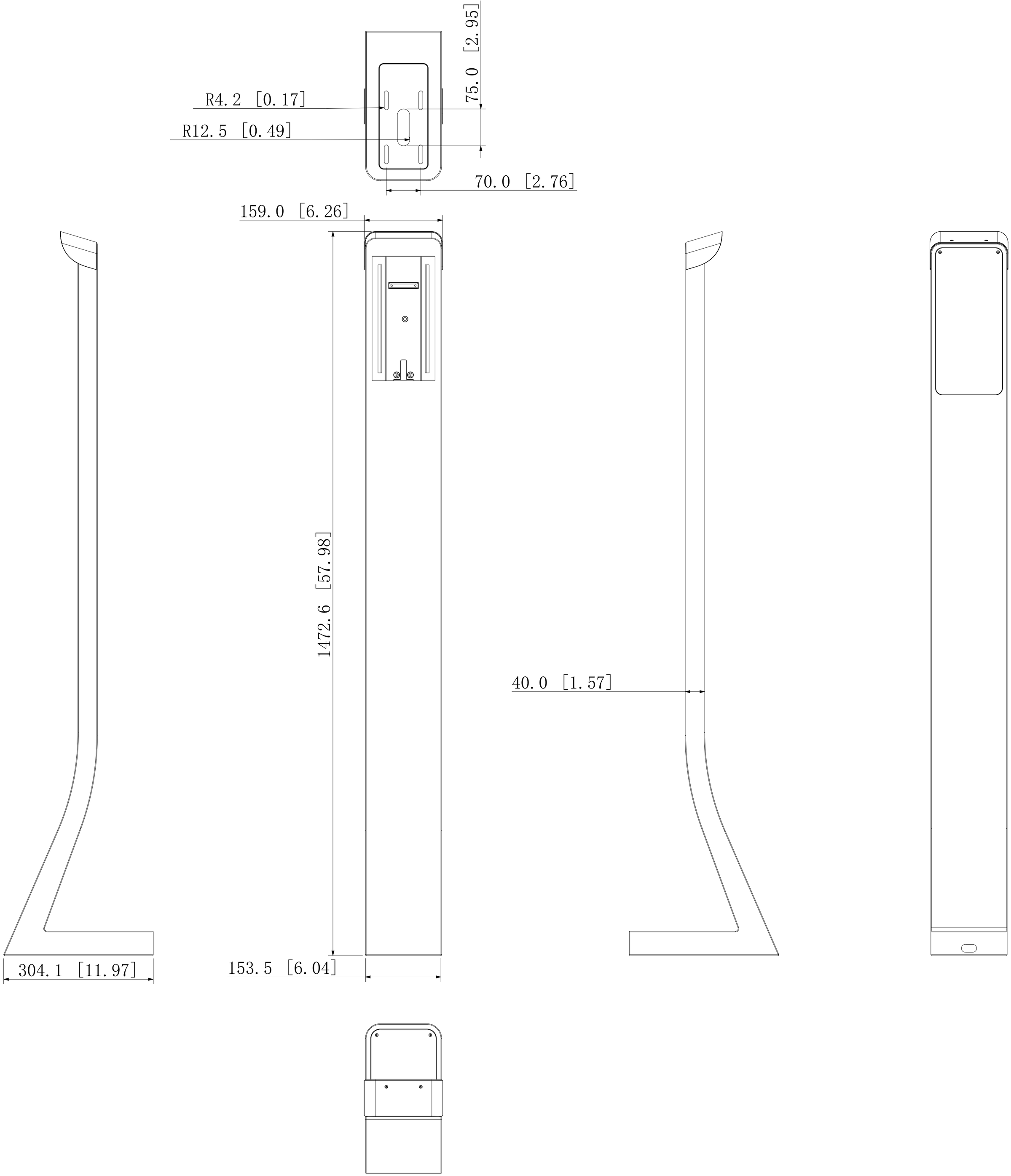
75.0 [2.95]
R4.2 [0.17]
R12.5 [0.49]
70.0 [2.76]
159.0 [6.26]
1472.6 [57.98]
40.0 [1.57]
304.1 [11.97]
153.5 [6.04]